COOMi

Find your ventilating solutions

SUPERMOON
SERIES
MOBILE FAN

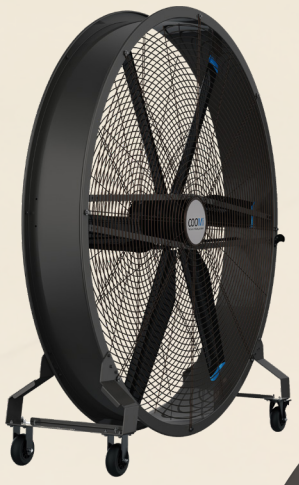

Variable Speed | Natural Wind | Low Noise | Easy to Move | Compact Structure | Energy Efficient | Outdoor Compatible | Tested & Certified

The Supermoon series mobile fan is an innovative product designed to enhance the comfort of the work environment and outdoor events. It features a self-developed variable frequency speed control system and utilizes a high-efficiency, energy-saving permanent magnet external rotor motor drive. With its compact structure, lightweight design, and appealing appearance, this fan offers the benefits of low noise, small size, and aesthetic appeal.

Its applications are in a broad range of settings including fitness centers, outdoor wedding venues, outdoor sports events, industrial factories, logistics warehouses, waiting areas, exhibition halls, and physical education halls. Serving as space ventilation and personnel cooling, it efficiently generates a substantial airflow towards the ground. This creates an airflow layer at a specific height, facilitating overall air circulation similar to a natural breeze system. By harnessing this technology, individuals can relish the delightful experience of enjoying the soothing effects of natural wind.

AERODYNAMIC FAN BLADE +

The Supermoon mobile fan blades are constructed from a combination of aluminum and magnesium alloy, which undergoes extrusion and stretching processes. This design offers numerous benefits, including high strength, excellent toughness, lightweight properties, long lifespan, and safe operation. To further enhance its durability, the surface of the fan blade undergoes T5+ bright surface oxidation treatment, improving its resistance to corrosion and oxidation. This treatment enables the fan blade to withstand operations in challenging environments.

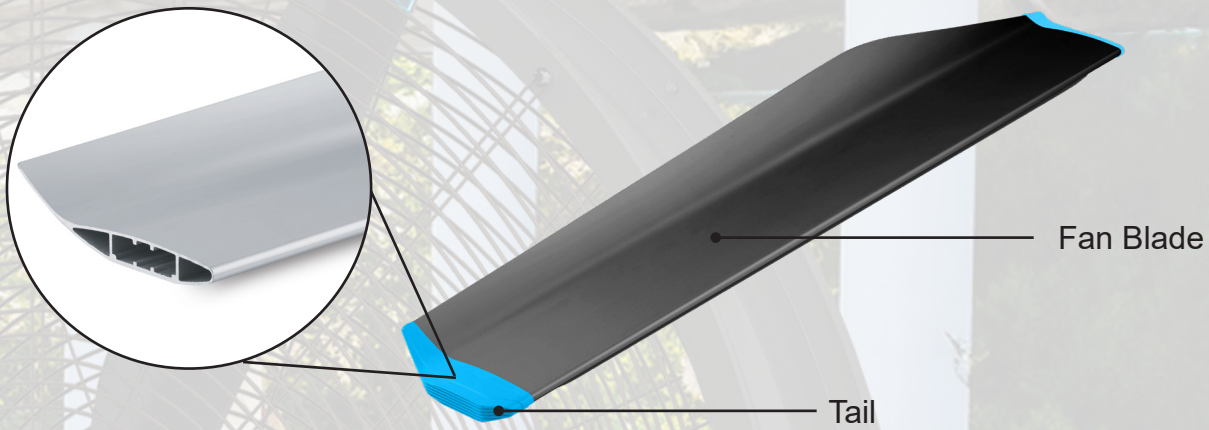

ENERGY EFFICIENCY

During the operation of the fan blade, the movement of air creates a vortex at the end of the aerofoil-shaped blade. To mitigate this energy loss, a tail wing is incorporated, which serves to stabilize the fan's operation and align the airflow more closely with aerodynamic principles. This helps to maintain consistent and efficient airflow.

PERMANENT MAGNET SYNCHRONOUS MOTOR

A Permanent Magnet Synchronous Motor (PMSM) is a type of electric motor that operates using a permanent magnet to create the magnetic field required for its operation. It has gained popularity due to its efficiency, precision, and versatility in a wide range of applications like electric vehicles, robotics, industrial automation, HVAC systems, aerospace, and more, where controlled and efficient motion is essential.

- Without rotor losses
- High efficiency and precision
- Large power factor (0-600 rpm)
- Improve grid operating environment
- Frequency modulation width (0-200HZ)
- Small size and lightweight
- Saving energy and highly efficient
- 5-year warranty

AIRFLOW VELOCITY & DISTANCE

The below airflow velocity is collected from our Supermoon 200 tested in a room 40m long, 15m wide, and 5m high. A comfortable range of airflow velocity that offers cooling without causing discomfort is between 1m/s to 3m/s but keep in mind that individual perceptions can vary, and other factors like humidity, temperature, air quality, noises, working & surrounding conditions, the distribution of air, and the direction of the airflow can also influence how a breeze is perceived.

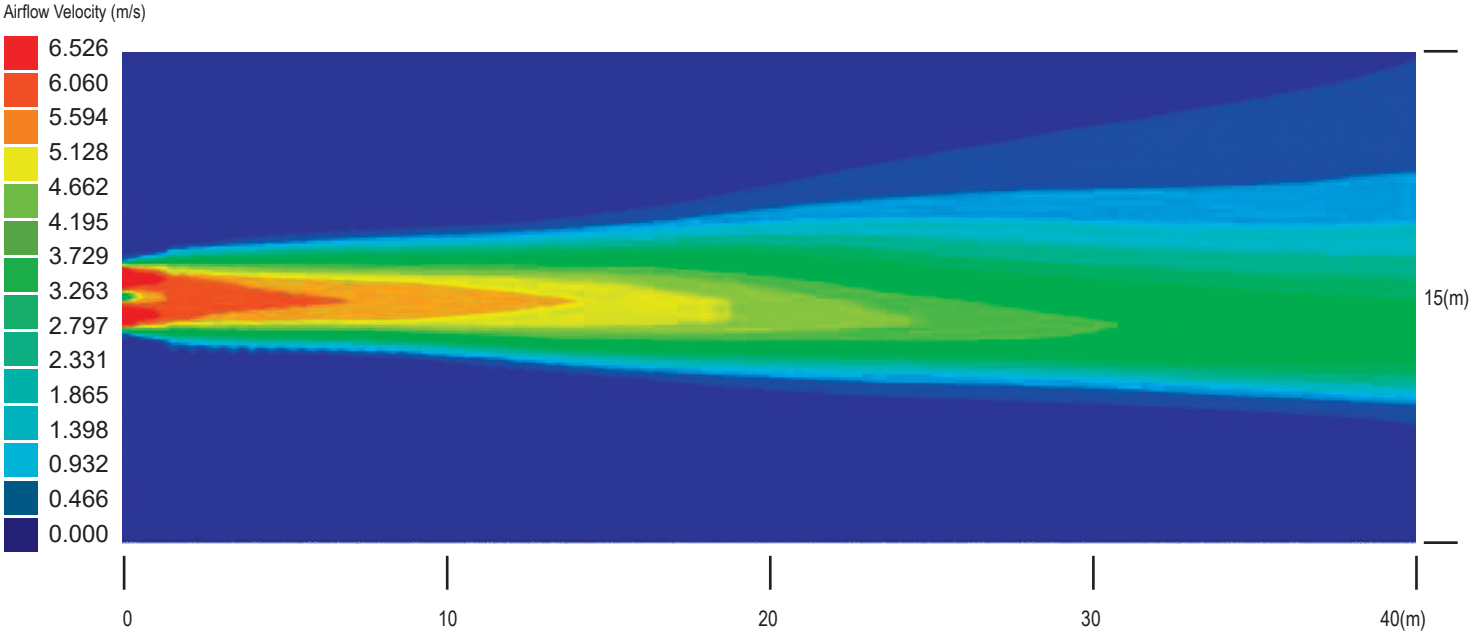

The Supermoon mobile fan incorporates a distinctive wing design that ranges from 1 to 2 meters in straight blade diameter. It utilizes the principles of aerodynamics and advanced blade manufacturing technology to create a robust airflow capable of generating a breeze-like system similar to the natural environment. This circulation flow field possesses excellent air agitation abilities, resulting in a three-dimensional wind sensation from all directions, enhancing the evaporation area of sweat and elevating your overall comfort level.

EASY CONTROL UNIT

The control unit is made and tested to IP65 which is suitable for use in outdoor events, with 4 buttons (start, stop, speed up, and slow down), it is simple to operate and as a standalone unit, it is against any electro-magnetic and radiation interferences. Also, the control unit is protected from any overload, over voltage, and overheating abnormal conditions.

DIMENSION AND INSTALLATION CLEARANCE

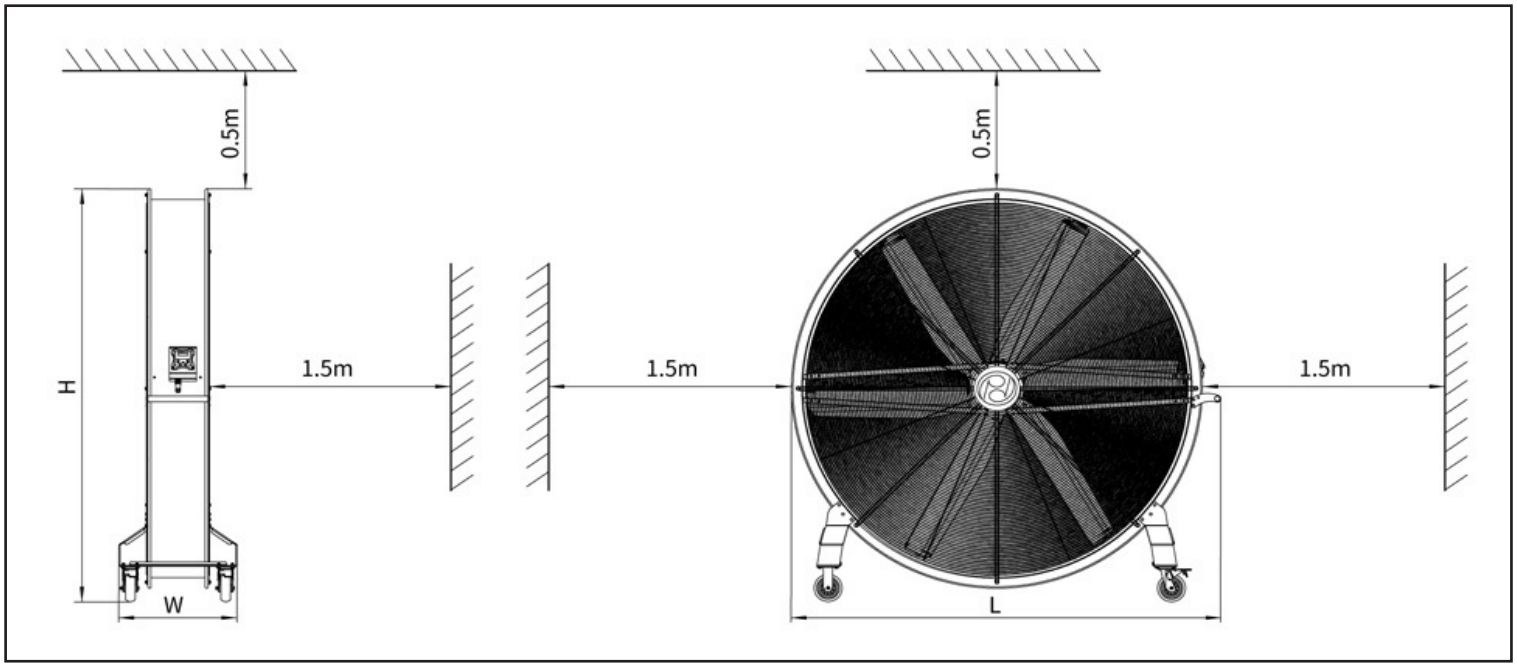

Model	Dimension (m)			Installation Clearance (m)		
	Length	Width	Height	Top	Sides	Back
Supermoon 200-6	2.20	0.60	2.20	0.50	1.50	1.50
Supermoon 150-6	1.70	0.60	1.70			
Supermoon 100-6	1.20	0.50	1.20			

TECHNICAL DATA

Model	Diameter (m)	Voltage (v)	Frequency (Hz)	Power (kW)	Rotating Speed (rpm)	Max Air Speed (m/s)	Airflow (m^3/h)	Weight (kg)	Noise (dB)	Coverage area (m^3)
Supermoon 200-6	2.0	230/380	50/60	1	≤300	5.5	80000	122	39	260
Supermoon 150-6	1.5	230/380	50/60	0.75	≤420	6.5	55000	93	39	150
Supermoon 100-6	1.0	230/380	50/60	0.55	≤600	7.0	30000	45	39	80

* Technical data may vary depending on the location and surrounding environment.

15 Kian Teck Crescent
Phone: 6268 0066
Email: coomi@casa.com.sg
Website: www.coomi.sg

COOMi
Find your ventilating solutions